Natgraph

# Metal Halide Light Sources & Light Integrator Systems

Natgraph manufacture a complete range of Metal Halide Light Sources to expose photo stencils or other Ultra Violet light sensitive products. Power levels from 1600 watts to 8kW provide the power and light distribution to expose stencils for CD printing frames through to large format display printing. Diazo (420nm) or Photopolymer (365nm) output lamps can be fitted. Stand mounted or overhead versions of these Light Sources are available.

All Natgraph Light Sources can also be operated by the in-built pre-set timer, or the optional, Natgraph Light Integrator Unit to ensure accurate exposures, in varying conditions each and every time.

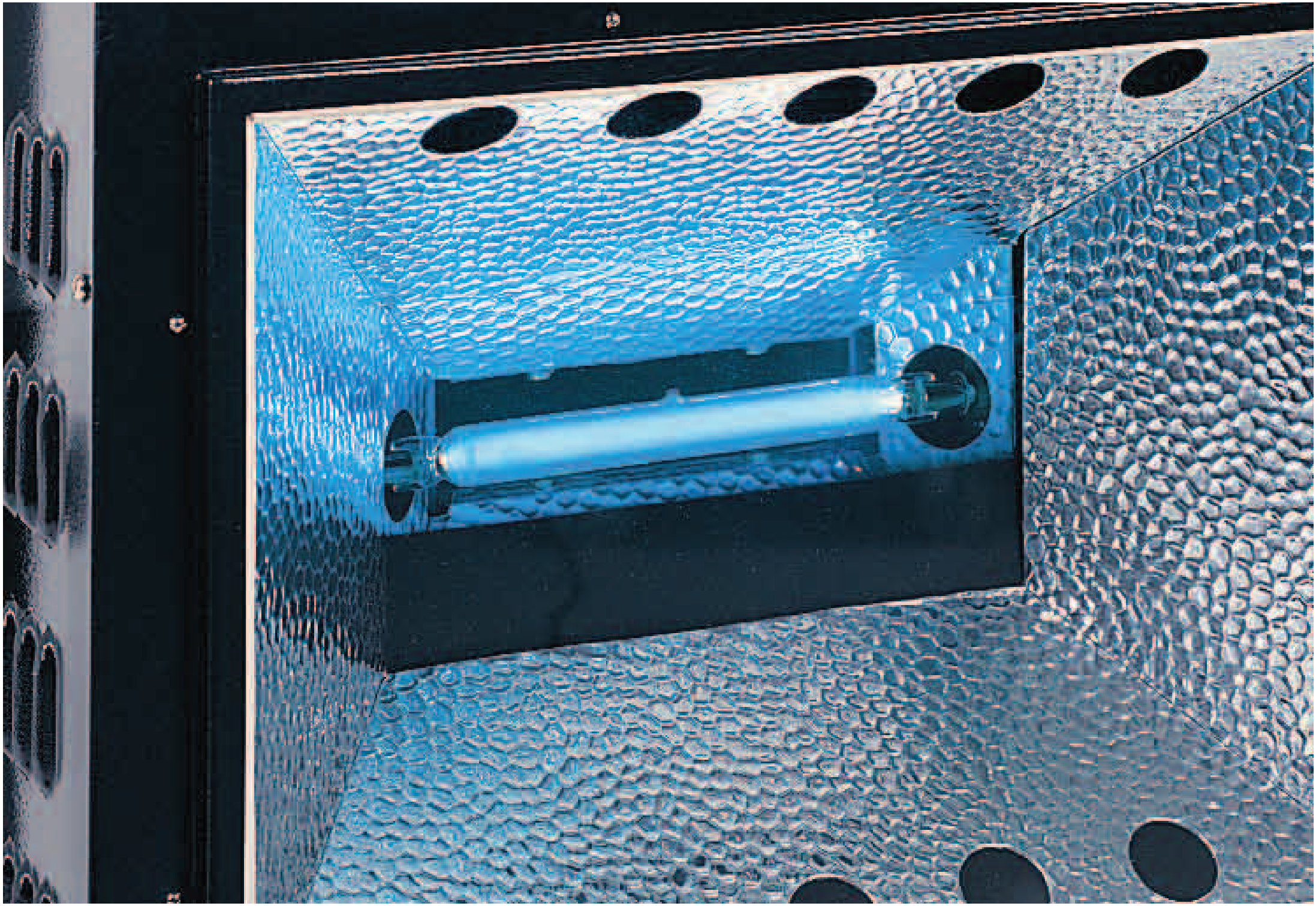

# 1600 Watt Automatic Shutter

The Natgraph 1600 Watt Automatic Light Source uses a unique, sealed beam lamp, which emits light in both the 420nm and 365nm wavelengths. It is therefore able to expose both Diazo and Photopolymer light sensitive products very efficiently. This Light Source is ideal to expose small to medium print formats.

Exposures are controlled by an automatic pre-set timer, or as an option by a Light Integrator. This activates the shutters, bringing the unit from its stand-by (400 watts) setting to full power, resulting in accurate exposures and economical operation.

A near silent running cooling fan keeps the lamp-house, shutters, drive motor and controls cool, even when left on stand-by for long periods.

This unit requires a single phase power supply.

## 1600 Watt Automatic Shutter Features

- Automatic shutter
- Universal output lamp
- Stand mounted or overhead
- Low power stand-by
- Cooling fan
- Pre-set timer
- Integrator socket

# 4/6kW Rapid Start

The Natgraph 4/6kW Rapid Start system provides a high power Light Source that is extremely economical and reliable in operation. Exposures are controlled by an automatic pre-set timer or as an option, by a Light Integrator. Wide angle optics give even light coverage of the area to be exposed, reducing exposure times. This Light Source is ideal to expose medium to large formats.

At the completion of the exposure the lamp is switched off and rapidly cooled for the next exposure, giving a restart time of 90 seconds. Power consumption on stand-by is only 40 watts, making this unit extremely economical to operate

The slim design of these Light Sources mean they take up very little floor-space and when installed overhead, they can be used with low ceiling heights. A safety window absorbs radiation below the 320nm level, removing dangerous ultra violet rays. Diazo or Photopolymer lamps will operate in this Light Source.

This unit requires a three phase power supply.

## 4/6kW Rapid Start Features

- Rapid start system
- Wide angled optics
- Toughened glass window
- Stand mounted or overhead
- Thermostatically controlled cooling
- Pre-set timer
- Integrator socket

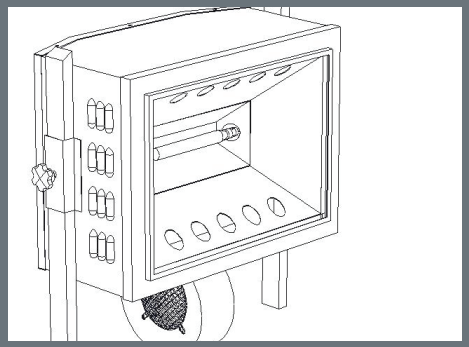

8kW Automatic Shutter

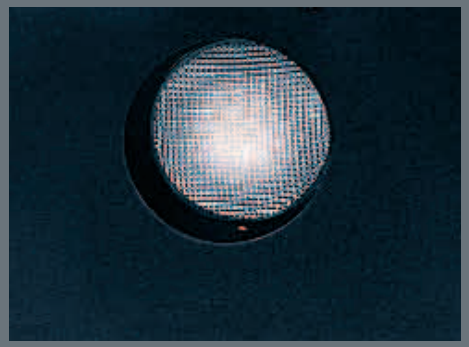

1600 watt sealed beam lamp

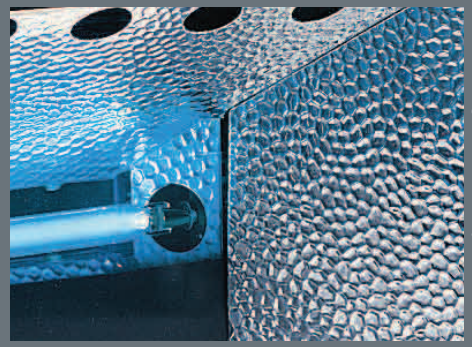

Dangerous UV rays removed

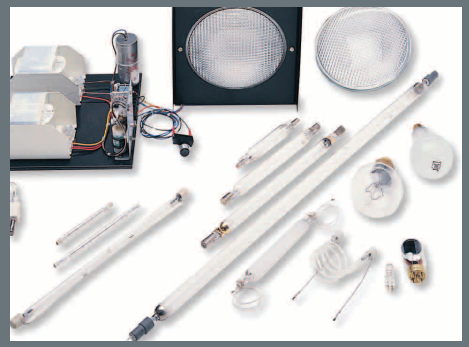

Spare lamps available from Natgraph

# 8kW Automatic Shutter

The Natgraph 8kW Automatic Shutter Light Source has been developed for applications where instant repeat exposures are required. This Light Source is ideal to expose large to oversize jumbo formats.

Exposures are controlled by an automatic pre-set timer or as an option, by a Light Integrator. The shutter is direct driven, giving precise exposure control. On stand-by the unit drops in power to 1kW, giving economical operation for such a high power Light Source. A safety window absorbs radiation below the 320nm level, removing dangerous ultra-violet rays. Diazo or Photopolymer lamps will operate in this Light Source. This unit requires a three phase power supply.

## 8kW Automatic Shutter Features

- Automatic shutter
- 4 or 8kW output selection
- Stand mounted or overhead
- Thermostatically controlled cooling
- Toughened glass window
- Pre-set timer
- Integrator socket

# Light Integrators

The Natgraph Light Integrator is a UV energy dependent device that controls the duration of exposures to ensure the correct amount of light is received by the subject to be exposed. A light cell is fitted with a dedicated filter which measures the light received in the required wavelength. The information received by the unit is used to control the exposure length and only when the pre-selected quantity of light is received, is a signal sent to the Light Source to finish the exposure.

Variations in light output, due to ageing of the lamp, lamp distance, or power supply fluctuations are automatically compensated for, thus ensuring accurate exposures each and every time.

These units are a must for the busy exposure room, having the capability to memorise 7 different exposure settings and also having one manually settable channel. Programming is extremely easy and the memory is maintained whilst the unit is switched off.

## Light Integrator Features

- 7 Memory channels
- 10m long light cell and wiring harness
- 1 Manual channel
- Easy programming
- Metal case

# Specifications:
# Metal Halide Light Sources & Light Integrator Systems

| Model No. | 1600 Watt Automatic Shutter | 4 / 6 kW Rapid Start | 8 Kw Automatic Shutter | Light Integrator |
|---|---|---|---|---|
| Height | 112cm (44”) | 127cm (50”) | 127cm (50”) | 10cm (4”) |
| Width | 66cm (26”) | 77cm (30”) | 77cm (30”) | 30cm (12”) |
| Depth | 31cm (12”) | 43cm (17”) | 43cm (17”) | 15cm (6”) |
| Weight | 55Kgs. (121lbs) | 119kgs. (261lbs.) | 142kgs. (312lbs.) | 4kgs. (8lbs.) |
| Voltage | Single Phase 230V<br>50 / 60 Hz. AC | Three Phase 400 Volts<br>50 / 60Hz. AC | Three Phase 400 Volts<br>50 / 60Hz. AC | Single Phase 230V<br>50 / 60 Hz. AC |
| Power | 1600 watts | 6kW | 8kW | 150 watts |
| Current | 10 Amps | 30 Amps | 30 Amps | 2 Amps |

The manufacturer’s policy is one of continuous improvement and the manufacturer therefore reserves the right to change or modify the design without prior notice. The technical specifications given are therefore for information only.

Download our brochures at:
www.natgraph.co.uk

t +44 (0) 115 97 95 800
f +44 (0) 115 97 95 700
e info@natgraph.co.uk

Natgraph Ltd,
Dabell Avenue,
Blenheim Industrial Estate,
Nottingham, NG6 8WA, UK